Instruction Manual

VP-14 VP-28 VP-45 VP-70

ROTARY VANE VACUUM PUMPS

oil-lubricated
air-cooled
ARBE MACHINE Make

ARBE
MACHINE MFG., INC.

Table of contents

1	**Product Description**	1
2	**Transport**	3
3	**Storage**	4
4	**Installation**	4
	4-1 Installation	4
	4-2 Piping Connection	5
	4-3 Oil Filling	6
	4-4 Electrical Connection	7
	4-5 Electrical Connection of Monitoring Devices	8
5	**Commissioning**	9
6	**Maintenance**	10
	6-1 Maintenance Schedule	10
	6-2 Checking the Oil Level	11
	6-3 Changing Oil and Oil Filter	11
	6-4 Exhaust Filter Replacement	13
7	**Overhaul**	14
8	**Shutdown and Decommissioning Procedure**	14
9	**Spare Parts**	15
10	**Troubleshooting**	16
11	**Technical Parameters**	18
12	**Vacuum Pump Special Oil**	19
*****	**Certificate of Quality**	20

1. Product Description

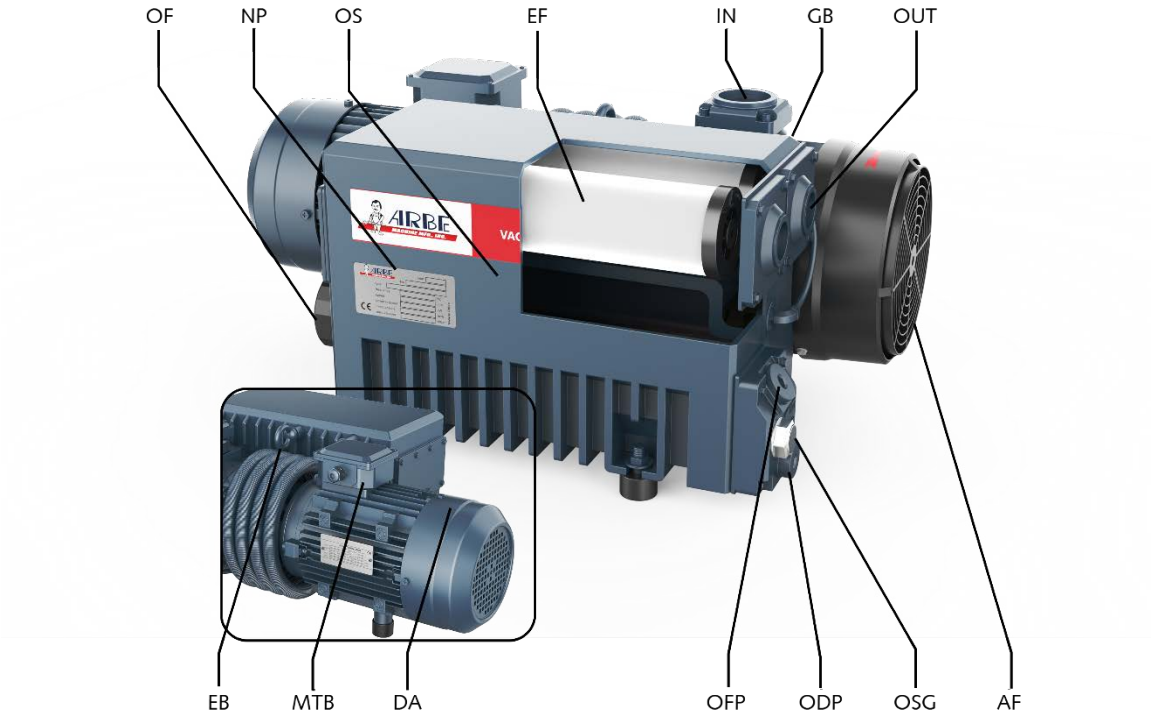

Pos.	Component	Pos.	Component
IN	Suction connection	MTB	Discharge connection
OUT	Oil sight glass	DA	Oil drain plug
OFP	Nameplate	EF	Oil filter
OSG	Directional arrow	NP	Oil separator
ODP	Exhaust filter	OF	Oil fill plug
EB	Gas ballast valve	AF	Motor terminal box
GB	Eye bolt	OS	Axial fan

1）Operating Principle

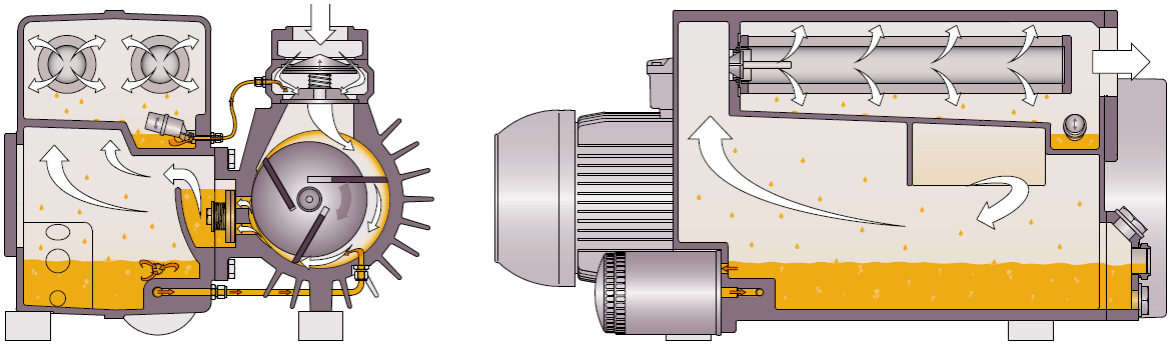

This vacuum pump operates on the rotary vane principle.
Oil seals the clearances, lubricates the vanes, and removes compression heat.
The oil filter cleans the circulating oil.
The exhaust filter separates oil from the discharged gas.

2) Application

This vacuum pump is designed for evacuating air and other dry, non-toxic, non-corrosive and non-explosive gases.
Evacuating any other medium will increase the thermal and mechanical load of the vacuum pump. Such usage is not permitted without prior approval from Arbe Machine.
This vacuum pump is suitable for use in non-explosive working environments.
The unit is designed for indoor installation. If outdoor installation is required, please consult Arbe Machine to adopt dedicated protective measures.
This vacuum pump is capable of maintaining ultimate pressure.

Float valve version (Standard):
Continuous operation is permitted for this vacuum pump.

Oil return valve version:
During operation, oil accumulates at the bottom of the upper chamber of the oil separator. As long as the pump is running, oil will not flow down into the lower chamber.
After at least 10 hours of continuous operation, if a high pressure difference occurs between the suction side and pressure side within a short period, the pump must be shut down for at least 15 minutes to allow oil to drain from the upper chamber to the lower chamber of the oil separator.
For permissible ambient conditions, refer to relevant specifications.

3) Start-up Control Device

This pump is supplied without a built-in start-up control device. The control device shall be installed on site during commissioning.
A starter device or variable frequency drive (VFD) is available as an optional accessory.

4) Optional Accessories

Gas Ballast Valve
It mixes process gas with a limited amount of ambient air to counteract pressure rise caused by vapor condensation inside the vacuum pump.
The gas ballast valve will affect the ultimate pressure of the vacuum pump.

Inlet Filter
Protects the vacuum pump from damage caused by dust and other solid particles contained in the process gas.
The inlet filter is equipped with a paper filter element or polyester filter element.

Oil Level Switch
The oil level switch is used to monitor the oil level inside the oil separator (OS).

2. Transport

WARNING!

Suspended load.

Risk of serious injury!

• Do not walk, stand or work underneath the suspended load.

CAUTION!

This vacuum pump is pre-filled with oil.

Tilting the oil-filled vacuum pump will cause a large amount of oil to enter the pump chamber.

If the vacuum pump is started with excessive oil inside the pump chamber, the vanes and the pump will be damaged immediately.

• Ensure the oil is drained from the vacuum pump before transportation, or keep the pump horizontally level at all times during transit.

• Make sure the lifting eye (EB) is intact, fully screwed in and firmly tightened by hand.

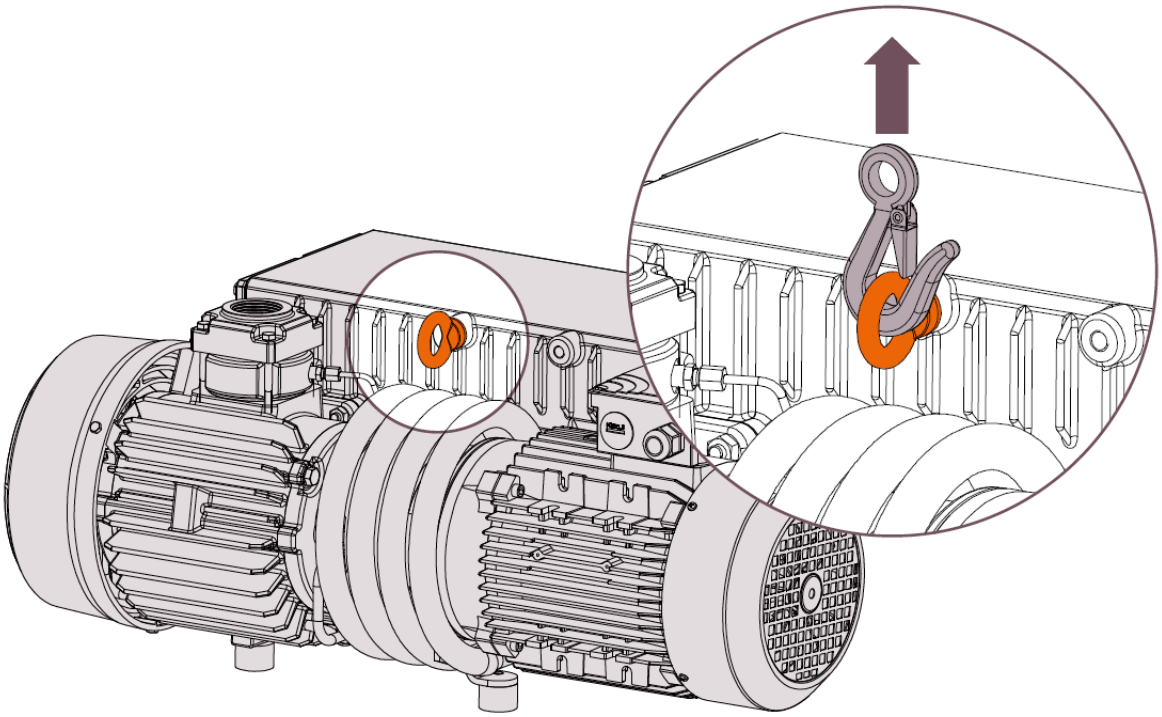

WARNING!

Risk of serious injury when lifting the vacuum pump by motor lifting eyebolts!

• Never lift the vacuum pump using the eyebolts mounted on the motor. Lift the vacuum pump only in the manner specified earlier in this manual.

• Inspect the vacuum pump for damage incurred during transportation.

If the vacuum pump is fastened to the base frame with bolts:

• Unscrew and remove the bolts.

3. Storage

• Seal all ports with adhesive tape or reinstall the blanking plugs.
If storage is planned for more than 3 months:
• Wrap the vacuum pump with anti-corrosion film.
• Store the vacuum pump in a dry and dust-free indoor area. If possible, keep it in the original packaging and maintain the ambient temperature between **0 ~ 40 °C**.

4. Installation

4-1 Installation

NOTICE!
Operating the unit under unapproved installation conditions.
Risk of premature damage! Impaired efficiency!
• Strictly comply with all specified installation conditions.

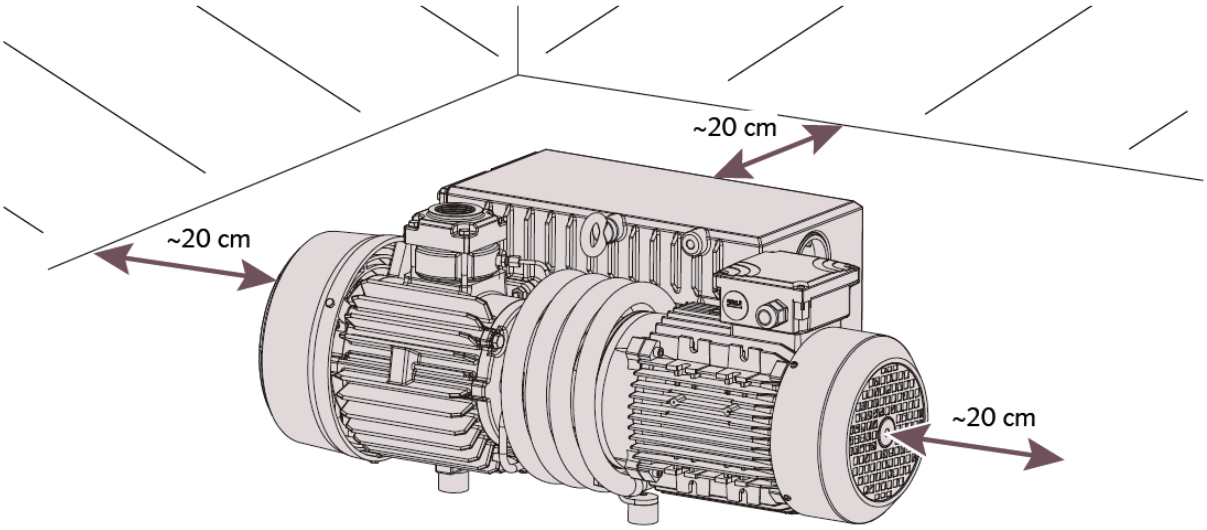

• Ensure the vacuum pump is used in a non-explosive working environment.
• Ensure ambient conditions comply with the Technical Parameters.
• Ensure ambient conditions meet the protection class requirements of the motor and electrical equipment.
• Install the vacuum pump in a well-ventilated location to guarantee adequate cooling.
• Make sure the cooling air inlet and outlet are not covered or blocked, and the cooling airflow is not adversely affected in any way.
• Keep the oil sight glass (OSG) of the vacuum pump easily accessible for inspection.
• Reserve sufficient space for maintenance operations.
• Place and install the equipment in a horizontal position. The inclination angle in any direction shall not exceed 1°.
• Check the oil level; refer to Oil Level Inspection for details.
• Ensure all protective covers and guards are properly installed.

If the unit is installed at an altitude above 1000 meters:
• Contact Arbe Machine. The motor shall be derated or upgraded, or the ambient temperature shall be subject to limitation.

4-2 Piping Connection

• Remove all protective caps before installation.

• Ensure the connected pipelines do not exert stress on the vacuum pump ports. Install flexible joints if necessary.

• Ensure the nominal diameter of all connected pipelines is **no smaller** than the diameter of the vacuum pump ports.

If the connecting pipeline is long, larger-sized pipes must be properly selected to avoid reducing the operating efficiency of the vacuum pump. Please feel free to contact Arbe Machine if you have any questions.

Inlet Connection

CAUTION!

Inhalation of foreign solid particles or liquid.

Risk of vacuum pump damage!

If the pumped gas contains dust or other foreign solid particles:

• Install a suitable filter (5μm or finer) at the vacuum pump inlet.

Connection size:

– G1 1/4

Other port sizes are available upon special requirements.

Exhaust Connection

WARNING!

Exhaust gas still contains residual oil.

Health hazard!

If exhaust gas is discharged into occupied rooms:

• Ensure adequate ventilation.

Connection size:

– 1× G1 1/4 ► VP-14 / VP-28

– 2× G1 1/4 ► VP-45 / VP-70

Other port sizes are available upon special requirements.

• Ensure unobstructed flow of exhaust gas. Never close or throttle the exhaust pipeline, nor use the exhaust pipeline as a pressurized air source.

If the pumped gas is discharged directly from the vacuum pump to the atmosphere:

• The exhaust pipeline shall be installed with a downward slope, or equipped with a gas-liquid separator or drain branch pipe with a drain valve, to prevent liquid from flowing back into the vacuum pump.

4-3 Oil Filling

CAUTION!

Improper oil used.

Risk of premature damage!

Impaired efficiency!

• Only use oil types certified and recommended by Arbe Machine.

For vacuum pump special oil type and filling quantity, please refer to Technical Parameters and Vacuum

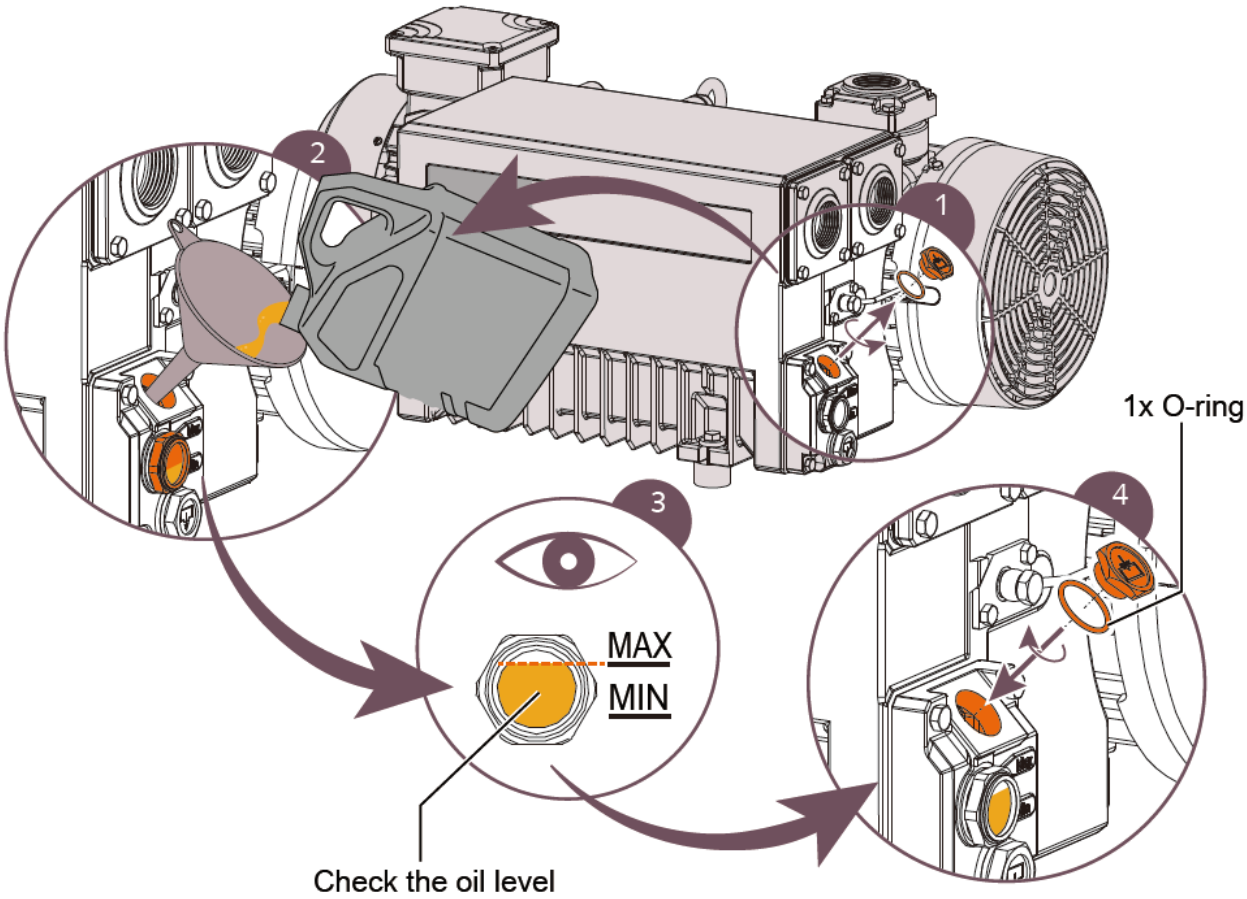

4-4 Electrical Connection

DANGER!

Live wires.

Risk of electric shock.

• All electrical installation work must be performed by qualified professionals.
• Ensure the voltage and frequency of the power supply match the rated values on the motor nameplate.
• Electrical installations must comply with applicable national and international standards.
• Install a lockable disconnect switch on the power supply line to ensure the equipment is completely powered off and safe during maintenance.
• The motor is equipped with built-in overload protection.
• Arbe Machine recommends installing a D-curve miniature circuit breaker (Type D MCB).
• Ensure the vacuum pump drive is free from power supply fluctuation and electromagnetic interference. Please contact Arbe Machine at any time if you have any questions.
• Connect the protective earth wire.
• Complete the electrical connection of the motor.

NOTICE!

Incorrect connection.

Risk of damage to the motor!

• The motor connection diagram shown below is for the standard version. Check the wiring inside the terminal box in accordance with the motor connection instructions or schematic diagram.

A: Single-phase Motor Circuit Diagram

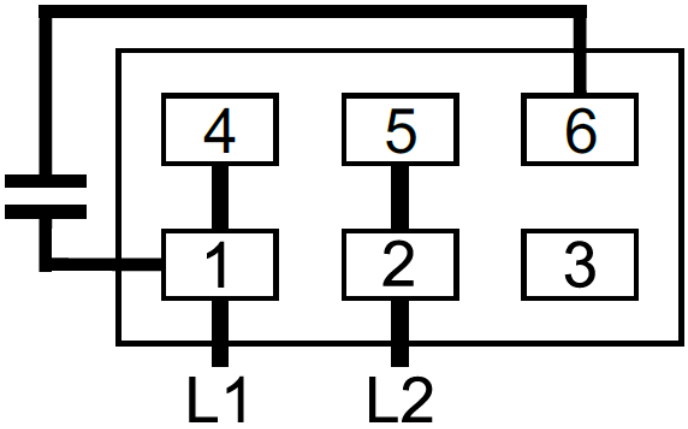

B: Three-phase Motor Wiring Diagram

(Δ) Delta Connection (Low Voltage)

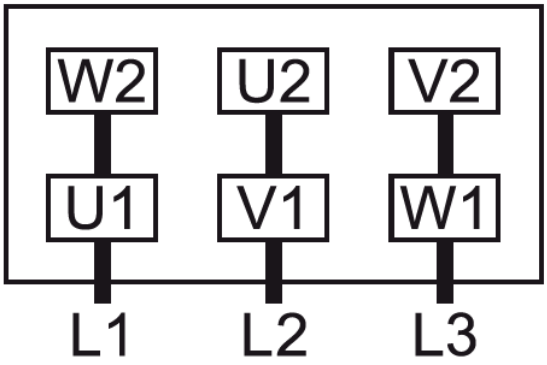

(Y) Wye Connection (High Voltage)

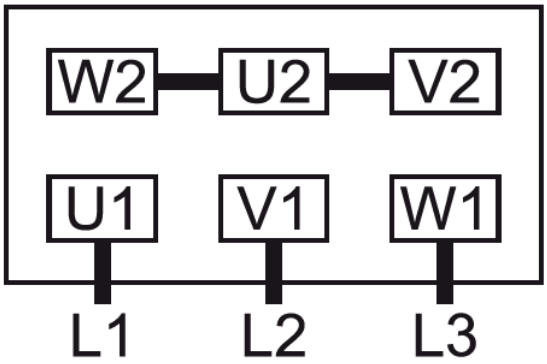

CAUTION!
Incorrect motor rotation direction.
Risk of vacuum pump damage!

• Incorrect motor rotation direction will damage the vacuum pump in a short time. Ensure correct connection before starting the vacuum pump.
• Confirm the rotation direction according to the arrow marking.
• Jog the motor momentarily.
• Observe the motor fan impeller and confirm the rotation direction before it stops completely.
To change the rotation direction:
• Swap any two phases of the three-phase power supply.

4-5 Electrical Connection of Monitoring Devices

NOTICE!
To avoid potential false alarms, Arbe Machine recommends configuring a minimum 20 seconds time delay for the control system.

5. Commissioning

CAUTION

The machine may be transported without oil.
However, operating the machine without oil will cause rapid and severe damage!
• Fill the vacuum pump with dedicated pump oil before commissioning.

CAUTION

During operation, the surface temperature of the vacuum pump may exceed 70°C.
Risk of scalding!
• Do not touch the vacuum pump while it is running or immediately after shutdown.

CAUTION

The vacuum pump generates noise during operation.
Risk of hearing damage!
When staying for a long time in an area without noise insulation:
• Wear hearing protection equipment.
• Comply strictly with the **Installation Requirements** (refer to relevant section for details).
• Start the machine.
• The maximum permissible number of starts shall not exceed 12 times per hour, all to be completed within one hour.
• Comply strictly with the **Operating Conditions** (refer to Technical Parameters for details).
• After the vacuum pump runs for several minutes, check the oil level and top up oil if necessary.
When the vacuum pump operates under normal working conditions:
• Measure and record the motor current for future maintenance and troubleshooting reference.
Extraction of Condensable Gases
A limited amount of water vapor is permitted in the gas flow. Extraction of any other gas must be approved by Arbe Machine.
When pumping condensable gases:

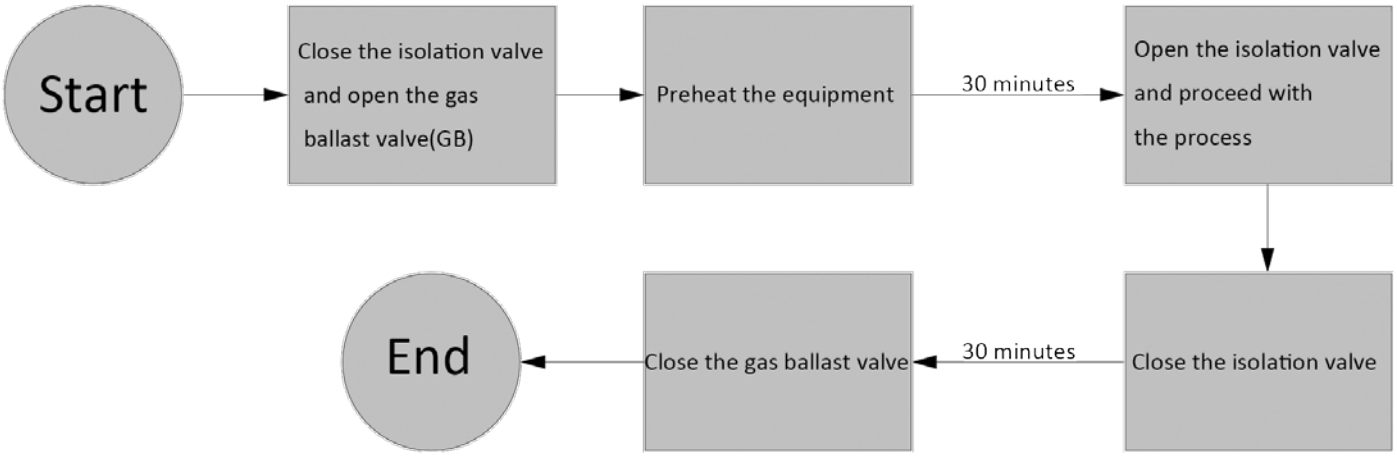

This item is **not included in the standard scope of delivery** and may be supplied as an optional accessory on certain products.

6. Maintenance

WARNING！

The vacuum pump may be contaminated with hazardous substances.

Risk of poisoning!

Risk of infection!

If the vacuum pump is contaminated with hazardous substances:

• Wear personal protective equipment.

CAUTION！

Improper equipment maintenance may cause personal injury, premature equipment wear and reduced operating efficiency.

Failure to maintain the equipment in accordance with specifications will create potential injury hazards, and lead to premature aging and lower working efficiency of the unit.

Negligence in maintenance poses safety risks of personal injury, and will result in premature damage and efficiency loss of the equipment.

• Adhere to the specified maintenance intervals or arrange maintenance services through authorized Arbe Machine service representatives.

• Ensure the vacuum pump is shut down and locked out to prevent accidental power-on and startup.

• Vent the vacuum pump to atmospheric pressure.

If necessary:

• Disconnect all connections.

6-1 Maintenance Schedule

The maintenance interval of the vacuum pump depends on the respective operating environment.

The following maintenance interval table is provided by Arbe Machine. You may shorten or extend the maintenance cycle according to actual application conditions.

Especially in heavy dust environments — such as locations or process gas containing large amounts of dust, other contaminants, or residual substances from the process — the maintenance interval of the vacuum pump **must be shortened**.

Maintenance Operation	Interval	
	Standard Application	Severe Application
Check oil level	Daily	
Check the pump for oil leaks; repair if necessary (contact Arbe Machine)	Monthly	
If equipped with an inlet filter: Inspect the inlet filter element, replace if necessary		
Change oil and oil filter (OF)	After max. 4000 hours, or at the latest 1 year	After max. 2000 hours, or at the latest 6 months
Change exhaust filter (EF)		
Clean dust and dirt from the pump	Every 6 months	
If equipped with a gas ballast valve (GB): Clean the gas ballast valve		
Contact Arbe Machine or local service provider for inspection and overhaul, if necessary	Every 5 years	

➢ Maintenance intervals apply to synthetic oil. Reduce the intervals when mineral oil is used; contact Arbe Machine for service.

6-2 Checking the Oil Level

- Shut down the unit.
- After the vacuum pump has stopped, wait for 1 minute, then check the oil level through the oil sight glass (OSG).

- Top up oil if necessary, refer to Oil Filling.

6-3 Changing Oil and Oil Filter

CAUTION !

Use of incorrect oil.

Risk of premature damage!

Impaired efficiency!

- Only use oil types certified and recommended by Arbe Machine!

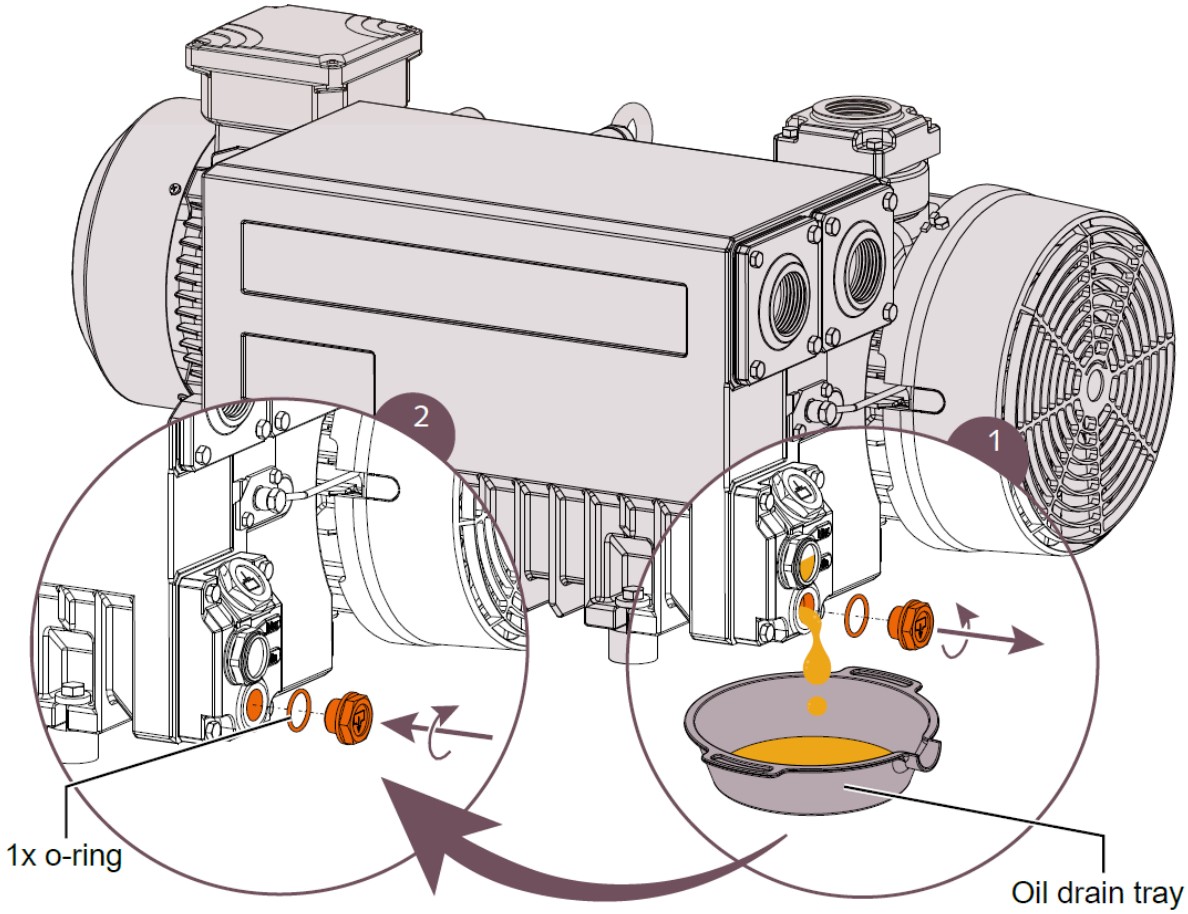

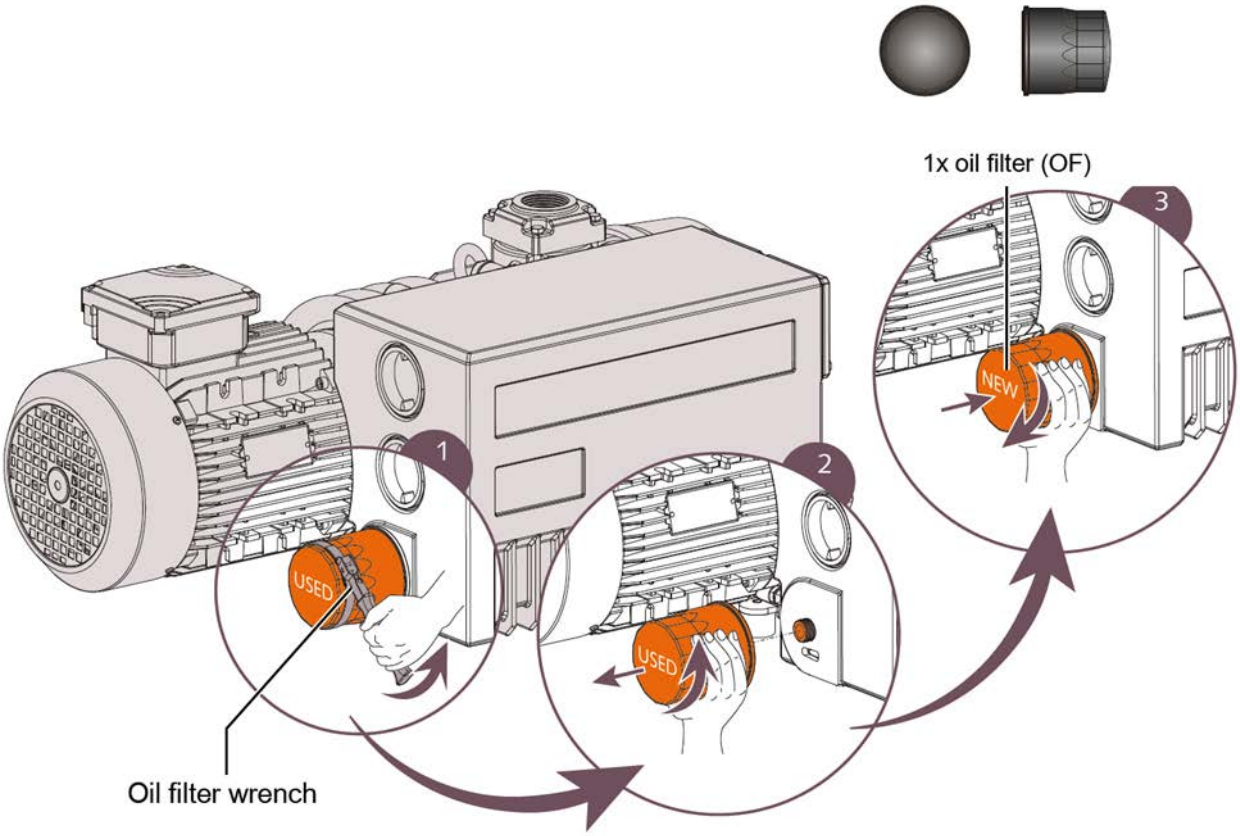

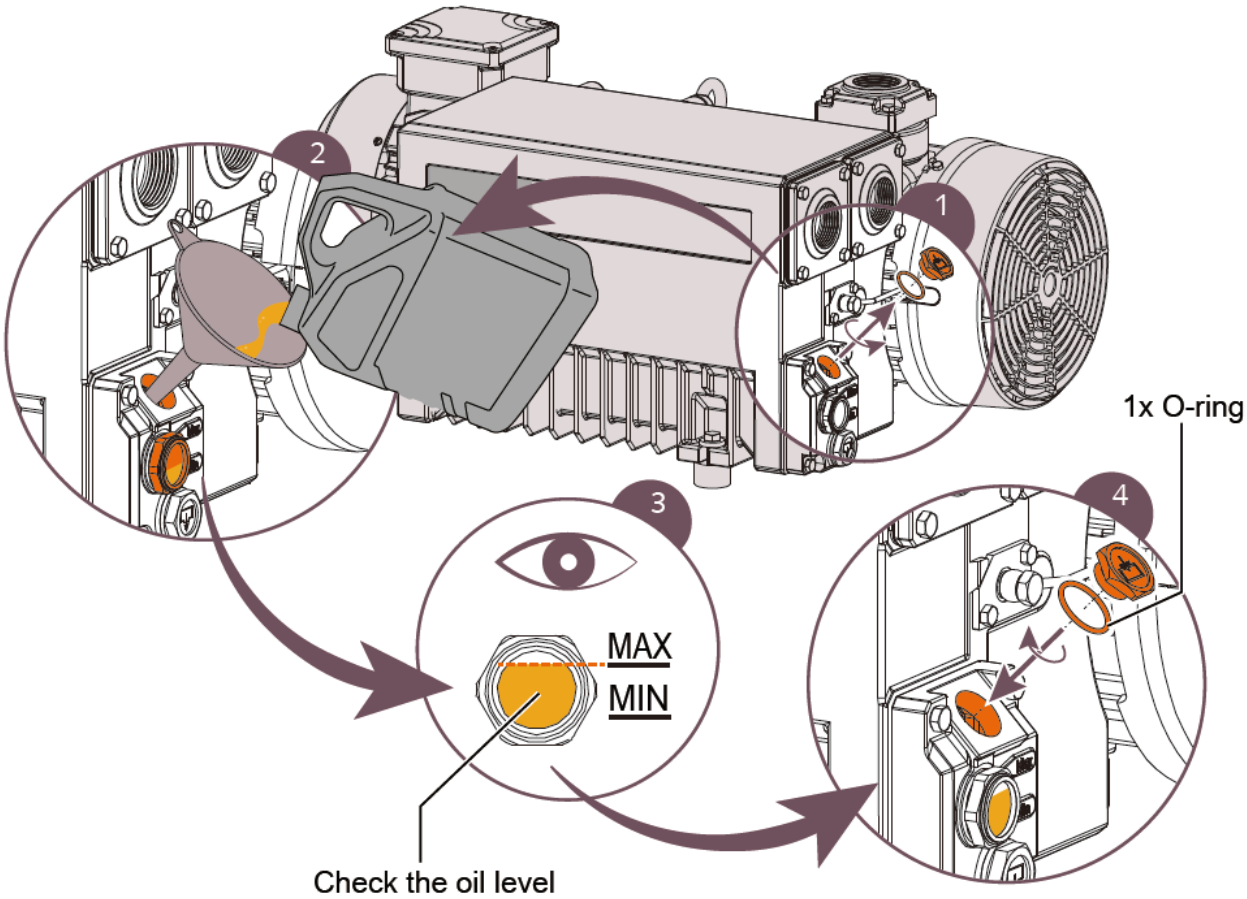

For detailed information on oil type and oil quantity, please refer to the "Technical Data" and "Oil" specifications.

6-4 Exhaust Filter Replacement

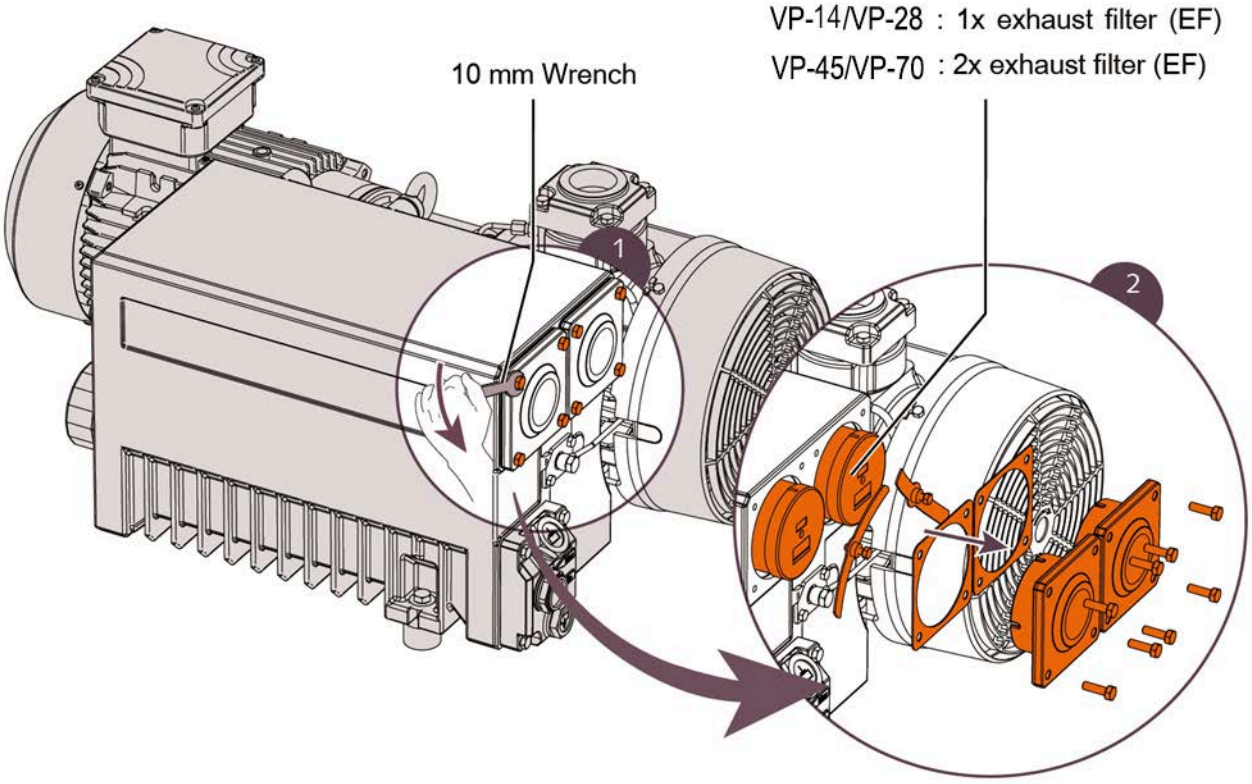

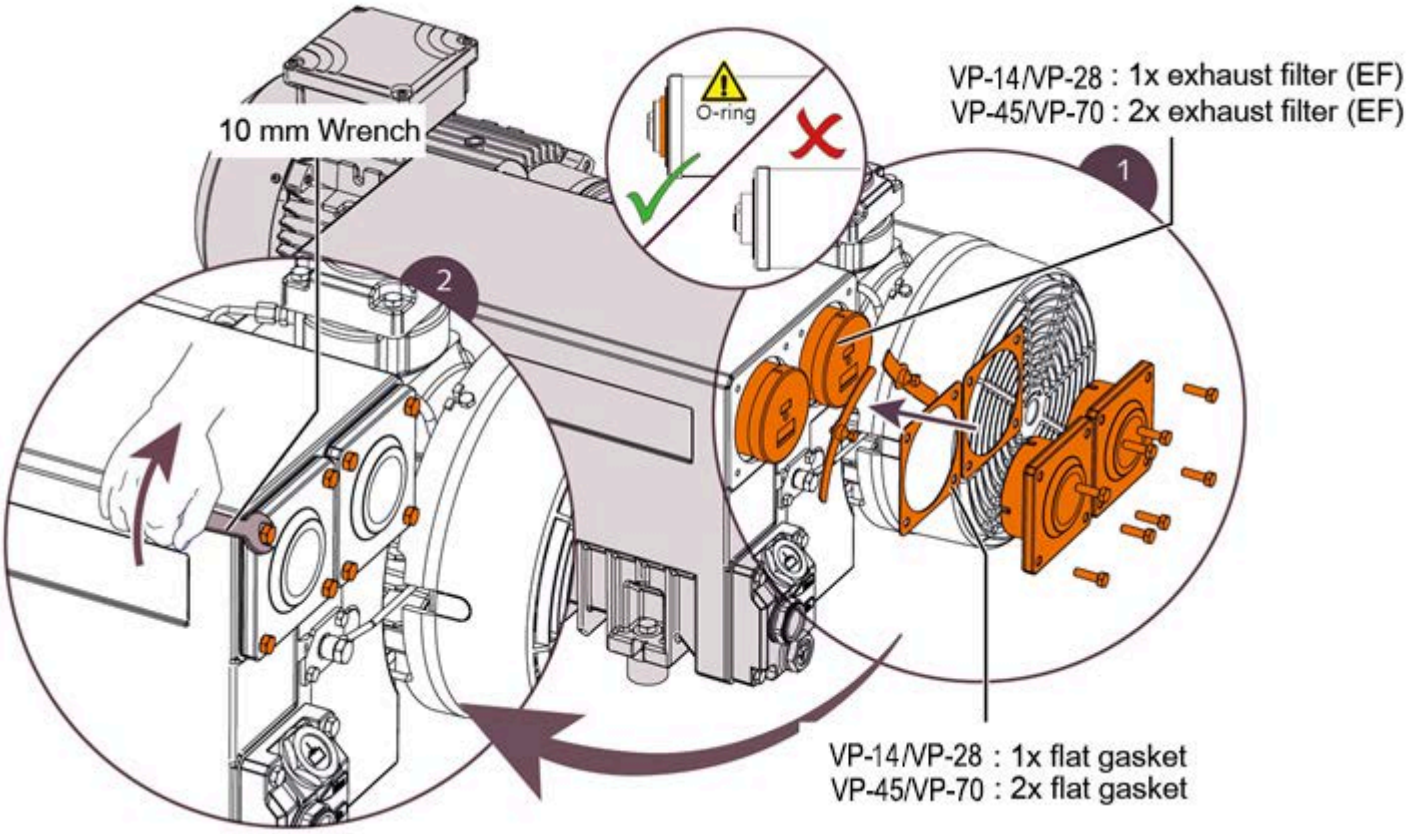

7. Overhaul

CAUTION

Improper assembly may lead to premature equipment failure and significantly increase the risk of malfunction; it will also cause performance degradation and efficiency loss of the vacuum pump.

Therefore, it is strongly recommended that:

Any disassembly and assembly work of the vacuum pump beyond the scope of this manual must be performed by Arbe Machine authorized service providers or trained professional technicians to avoid potential safety hazards and equipment damage.

WARNING

The vacuum pump may be contaminated with hazardous substances.

Risk of poisoning! Risk of infection!

If the vacuum pump is contaminated with hazardous substances:

• Wear personal protective equipment.

Special Instructions for Pumping Hazardous Substances

When the gas pumped by the vacuum pump contains pollutants harmful to human health, the following requirements must be strictly observed:

- The vacuum pump must undergo thorough and effective decontamination treatment.
- A fully completed **Declaration of Contamination** must be provided, which is legally binding.

Arbe Machine will only accept vacuum pumps accompanied by a fully completed and signed **Declaration of Contamination**. Equipment without a compliant declaration cannot be accepted for processing.

---

8. Shutdown and Decommissioning Procedure

Before performing shutdown operations, follow these steps to ensure safety:

• Confirm the vacuum pump is completely shut down, disconnect the power supply, and lock out the power switch to prevent accidental startup.

• Verify the pump chamber is vented to atmospheric pressure to eliminate internal vacuum.

• Remove all external connection pipes and cables from the equipment.

• For long-term storage, refer to the "Storage" section of this manual.

8.1 Equipment Disassembly and Disposal

When scrapping or disassembling the equipment, follow these steps in compliance with environmental and safety regulations:

- Completely drain the used oil from the pump.
- Remove the exhaust filter and oil filter.
- Separate oil-containing and contaminated special waste from the pump body.
- All special waste must be disposed of by compliant agencies in accordance with local regulations.
- Metal components of the pump body shall be recycled in accordance with industrial metal scrap specifications.

9. Spare Parts

□ **IMPORTANT WARNING: Risks of Using Non-Genuine Parts**

The use of non-genuine Arbe Machine parts will directly result in:

- A significantly increased risk of premature equipment failure and abnormal damage;
- Degraded vacuum pump performance and reduced operating efficiency.

To ensure stable equipment operation and maintain the validity of the warranty service, only use **genuine Arbe Machine original spare parts and consumables**.

Model	Service Kit	Seal Kit	Repair Kit
VP-14	WD0992020002	WD0991020001	WD0993025003
VP-28	WD0992040002	WD0991040001	WD0993040003
VP-45	WD0992063102	WD0991063101	WD0993063003
VP-70			WD0993100003
F Series			
VP-14F	WD0992025022	WD0991025011	WD0993025033
VP-28F	WD0992040022	WD0991040011	WD0993040033
VP-45F	WD0992063122	WD0991063111	WD0993063033
VP-70F			WD0993100033

If you require other spare parts lists and model specifications, please contact Arbe Machine directly for official guidance.

10. Troubleshooting

- **High-risk Warning: Electrical Safety**

Danger! Risk of live components

Live circuits are present inside the equipment, posing a fatal electric shock hazard.

All electrical installation and maintenance work must be carried out by qualified professional electricians. Unauthorized personnel are strictly prohibited from operation.

- **High Temperature Safety Warning**

Caution! Risk of hot surfaces

The vacuum pump surface reaches extremely high temperatures during operation, posing a scald hazard. Allow the equipment to cool fully to a safe temperature before touching the pump body or performing maintenance.

>The figure below shows the schematic diagram of key components involved in troubleshooting

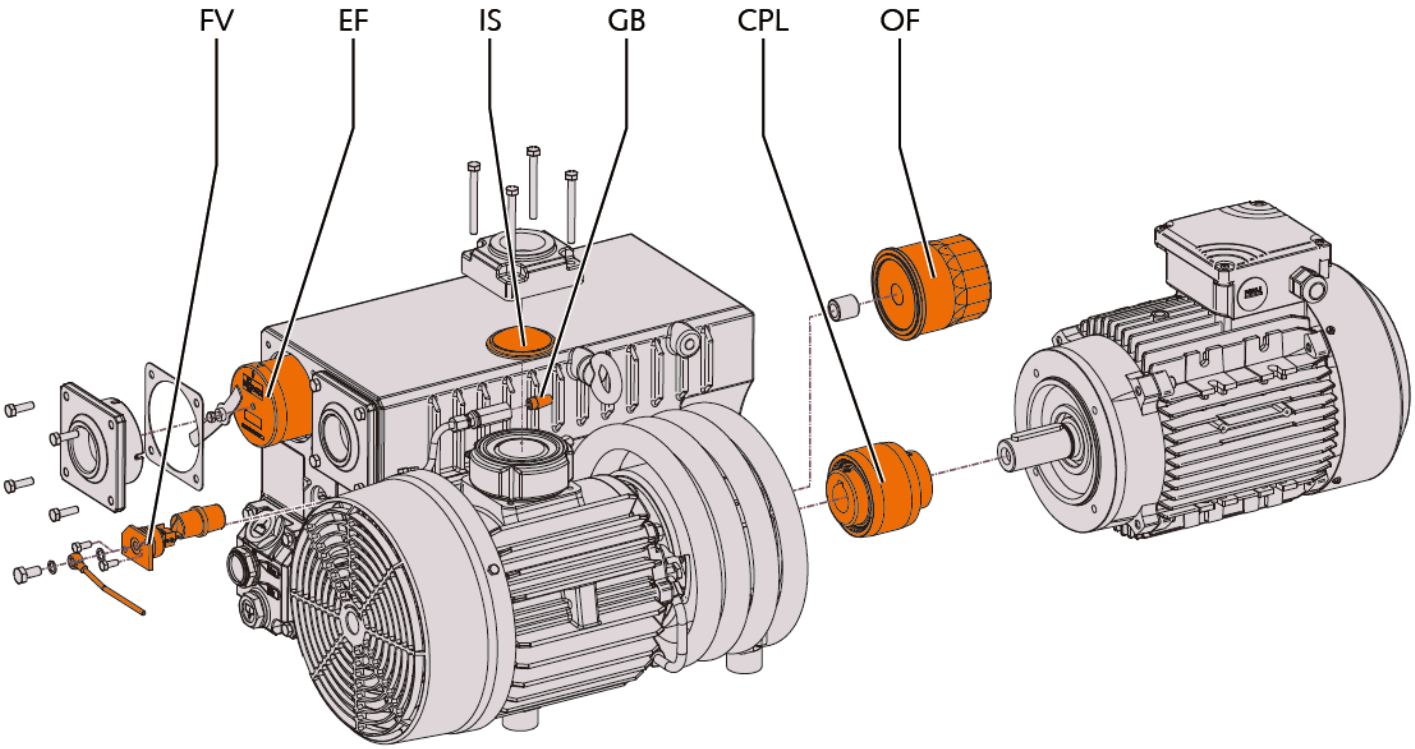

POS	Component	POS	Component
IS	Inlet screen	CPL	Coupling
GB	Gas ballast valve	EF	Exhaust filter
FV	Floating valve	OF	Oil filter

Troubleshooting Chart

Symptom	Possible Cause	Remedial Action
Vacuum pump fails to start	Incorrect motor operating voltage	• Check the power supply.
	Motor damaged	• Replace the motor.
	Coupling (CPL) damaged	• Replace the coupling (CPL).
Vacuum pump cannot reach normal pressure at the suction port	Oil level too low	• Add oil.
	Inlet screen (IS) clogged	• Clean the inlet screen (IS).
	Optional inlet filter cartridge clogged	• Replace the inlet filter cartridge.
	Internal component damage	• Repair the vacuum pump (contact Arbe Machine).
Abnormal noise	Coupling (CPL) damaged	• Replace the coupling (CPL).
	Vane damage	• Repair the vacuum pump (contact Arbe Machine).
	Bearing damage	• Repair the vacuum pump (contact Arbe Machine).
Vacuum pump operating temperature too high	Insufficient cooling	• Remove dirt and debris from the vacuum pump.
		• Check the cooling fan.
	Ambient temperature too high	• Comply with the vacuum pump's operating ambient temperature range.
	Oil level too low	• Add oil.
	Exhaust filter (EF) clogged	• Replace the exhaust filter (EF).
Machine emits oil mist or discharges oil droplets through gas exhaust	Oil mist separator (EF) partially clogged	• Replace the exhaust filter (EF).
	Oil mist separator (EF) with O-ring installed incorrectly	• Ensure correct installation of the oil mist separator (EF) and O-ring.
	Float valve (FV) malfunction	• Check the float valve and oil line for clogging; clear obstructions.
	For versions with oil return valve:	• Periodically shut down the machine briefly (refer to the oil return valve version).
	Continuous operation over 10 hours without interruption	
Abnormal oil consumption	Oil leaks	• Replace the sealing components.
	Float valve (FV) malfunction	• Check the float valve and oil return line; repair if necessary.
	Prolonged operation at atmospheric pressure	• Ensure the equipment operates under vacuum conditions.
Oil turns black	Excessive oil change interval	• Clean and replace the vacuum pump (contact Arbe Machine).
	Optional inlet filter damaged	• Replace the inlet filter.
	Vacuum pump operating temperature too high	• Refer to the fault: "Vacuum pump operating temperature too high".
Oil emulsified	Vacuum pump ingested water or severely contaminated with moisture	• Clean the vacuum pump (contact Arbe Machine).

		• Clean the gas ballast valve filter (GB).
		• Modify the operating mode (refer to "Pumping Condensable Gases").

Note: If you encounter faults not listed in this troubleshooting table, please contact Arbe Machine for solutions.

11. Technical Parameters

Technical Parameters Table

Model	Unit	Hertz	VP-14	VP-28	VP-45	VP-70
Suction air rate	m³/h	50 Hz	24	40	63	100
		60 Hz	28	48	78	120
Vacuum absolute	mbar	50/60 Hz	0.5	0.5	0.5	0.5
Motor power	kW	50 Hz	0.75	1.1	1.5	2.2
		60 Hz	0.90	1.5	2.2	3.0
Rated voltage	1ph	50/60 Hz	220V±10%	220V±10%	/	/
	3ph	50 Hz	Δ 200-230 V	Δ 200-230 V	Δ 200-230 V	Δ 200-230 V
			Y 380-415 V	Y 380-415 V	Y 380-415 V	Y 380-415 V
		60 Hz	440-460 V	440-460 V	44 0-460 V	440-460 V
Rated speed	rpm	50 Hz	2800	1450	1450	1450
		60 Hz	3300	1700	1700	1700
Noise level	dB(A)	50 Hz	65	64	65	66
		60 Hz	66	65	66	67
Inlet connection	in	50/60 Hz	G ½ or G¾	G 1¼"	G 1¼"	G 1¼"
Exhaust connection	in	50/60 Hz	/	G 1¼"	G 1¼"	G 1¼"
Steam treatment capacity	kg/h	50/60 Hz	0.5	0.7	1	1.5
Oil injection volume	L	50/60 Hz	0.75	1.5	2	2
Complete weight	kg	50 Hz	22	44	54	69
		60 Hz	22	46	59	75
Installation size	mm	50 Hz	431*245*218	647*307*270	640*405*290	710*405*290

12. Vacuum Pump Special Oil

Arbe Machine	SVO100	SVE101
ISO-VG	100	100
Oil Type	Mineral	Synthetic oil
Ambient Temperature Range [℃]	5~35	5~40
Oil Suitability / Compatibility	Standard oil for operating temperatures up to 90℃	Suitable for severe applications
1L Pack Part Number	WD100001	WD101001
5L Pack Part Number	WD100005	WD101005
18L Pack Part Number	WD100018	WD101018

➢ Services

Sales and Service Network

www.arbemachine.com

Certificate of Quality

Manufacturer: Arbe Machine

Address:

Statement: The vacuum pumps with the following models:

VP-14 VP-28 VP-45 VP-70

The products conform to the following standards:

- **JB/T 8944-1999：Methods of performance test for single-stage rotary vane vacuum pumps.**
- **JB/T 53014-1999：Product quality classification for single-stage rotary vane vacuum pumps.**
- **JB22360-2026：Safety requirements for vacuum pumps.**
- **2026/42/EC,98/37/EC,2026/95/EC ： EC Machinery Directive & Low Voltage Directive (MD + LVD).**

Product Qualified
(Inspection Passed)

ARBE MACHINE MAKE

ARBE MACHINE all rights reserved